CIRCUIT DIAGRAM (PC07X2, CCT, DDR)

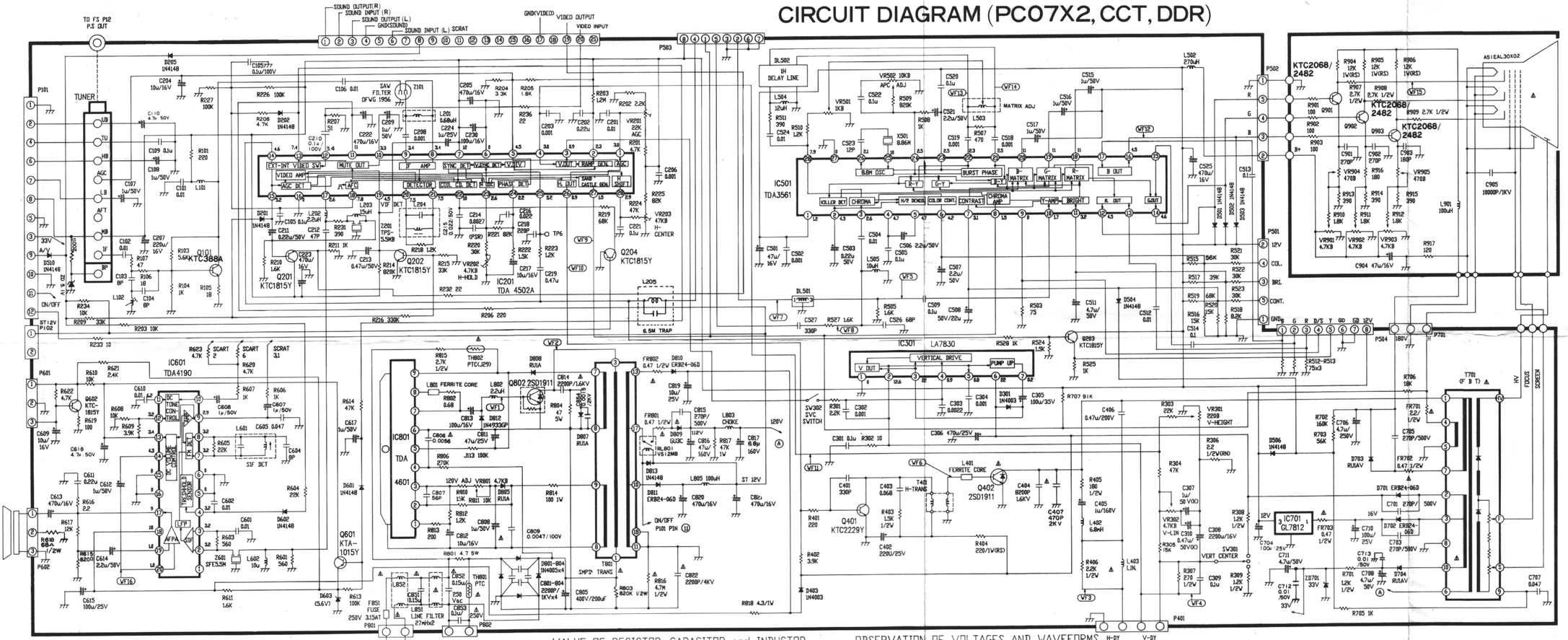

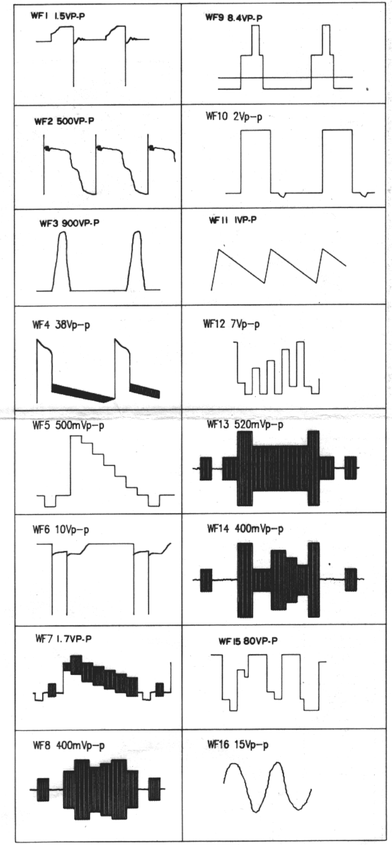

CBT-2172M

P / N : 484-513H(1/2)

The components marked ⚠ conform to VDE or IEC guidelines and are essential for safe operation of the set while those marked ⚠ are required for correct operation. Use specified parts only when replacing.

NOTICE
Since this a basic circuit diagram. The value of components and some partical connection are subject to be changed for improvement

VALUE OF RESISTOR, CAPACITOR and INDUCTOR

1. Resistance is shown in ohm, k = 1,000, M = 1,000,000.
2. Unless otherwise noted in schematic, all capacitor values less than 1 are expressed in μF and the values more than 1 in pF.
3. Unless otherwise noted in schematic, all inductor values more than 1 are expressed in uH, and the values less than 1 in H.

OBSERVATION OF VOLTAGES AND WAVEFORMS

1. Voltages read with VTVM form point shown to chassis ground, line voltage 180–270V volts, colour bar signal.
2. Voltages reading may vary ±20%
3. The schematic shown is representative only.
4. All waveforms are taken using a wide band oscilloscope and a low capacity probe.
5. Check FINE TUNING, AGC, BRIGHTNESS, CONTRAST and COLOUR controls for best picture, make sure that CONTRAST and COLOUR controls are in maximum position. BRIGHTNESS control is almost in maximum position.
6. Waveforms are taken using a standard colour bar signal.

CIRCUIT DIAGRAM FS (FOR CCT CONTROL)

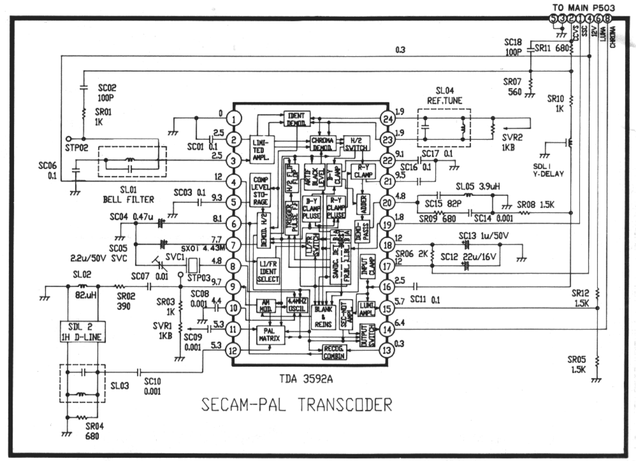

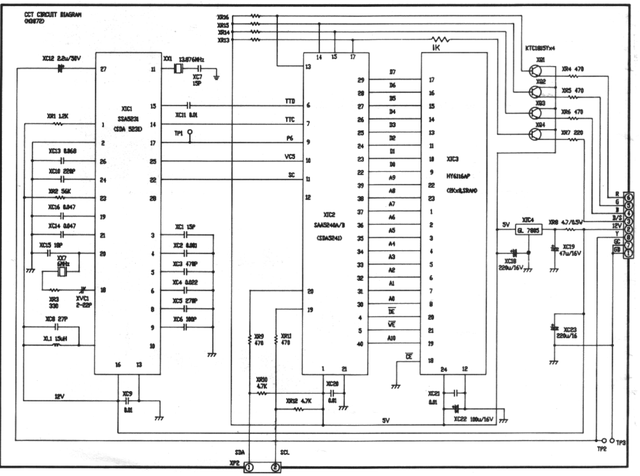

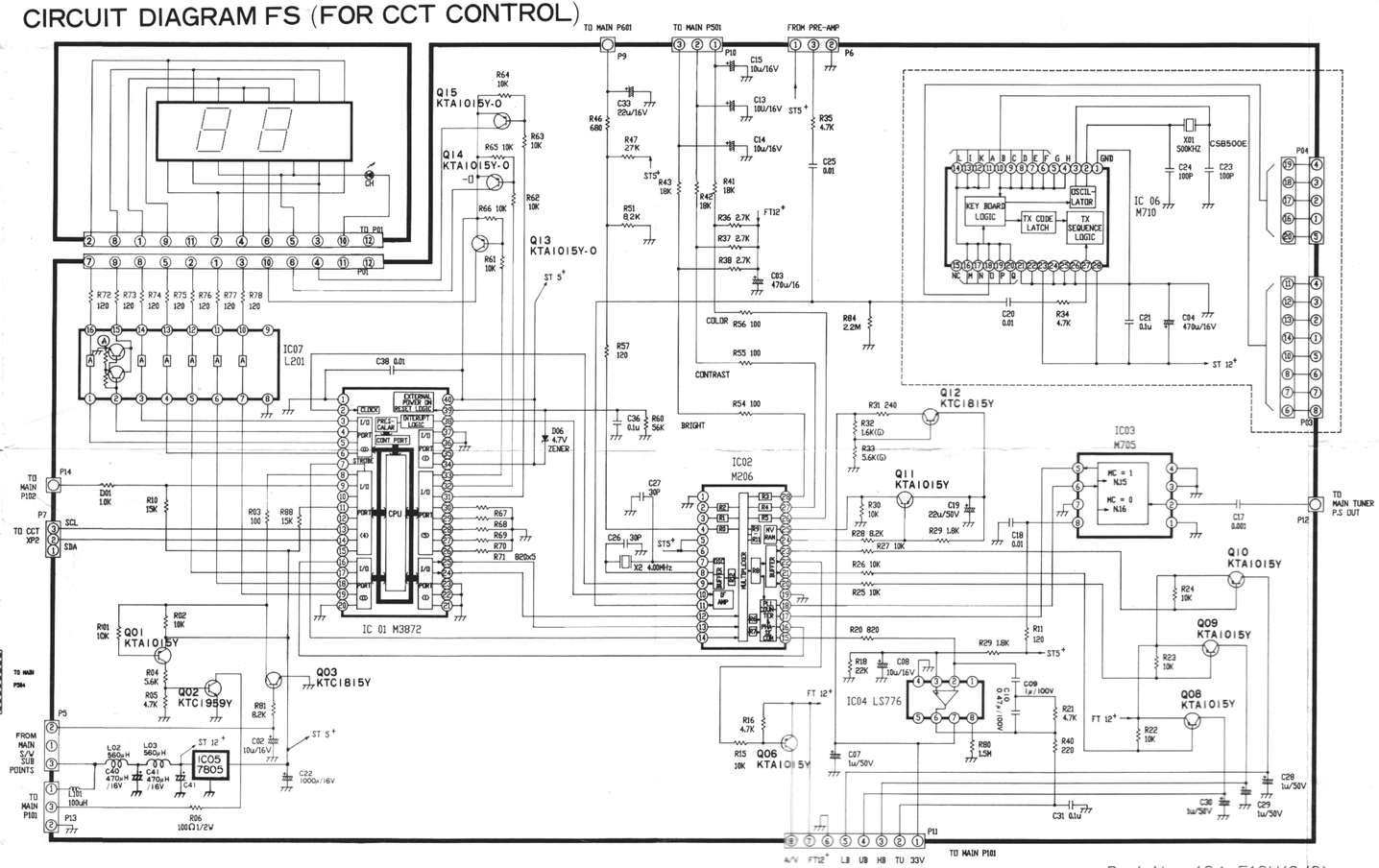

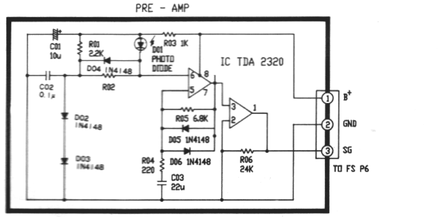

TX SCHEMATIC DIAGRAM

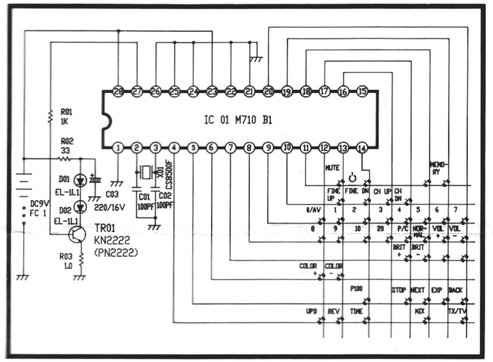

LOCAL FUNCTION KEY

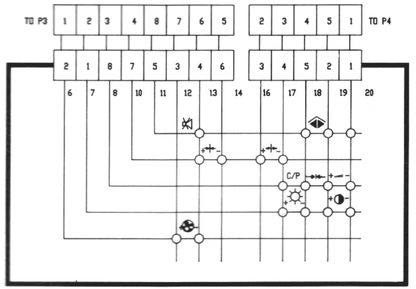

P / N : 484-513H(2/2)